SOMANY Bathware

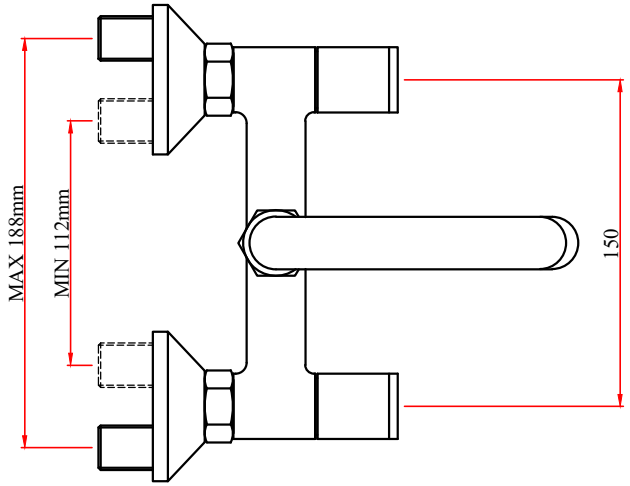


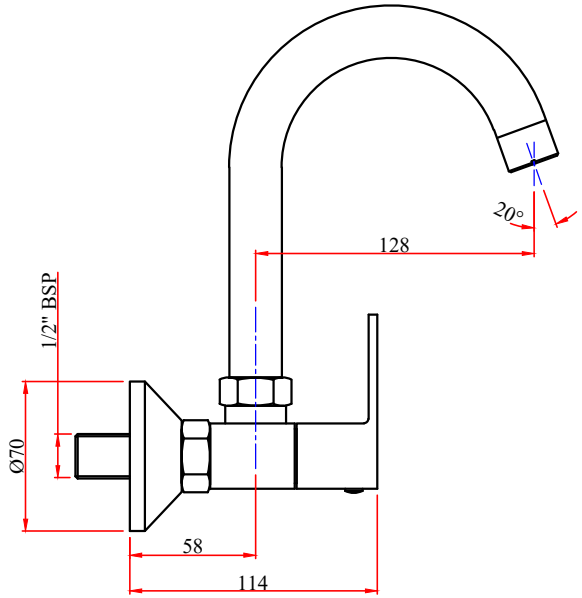


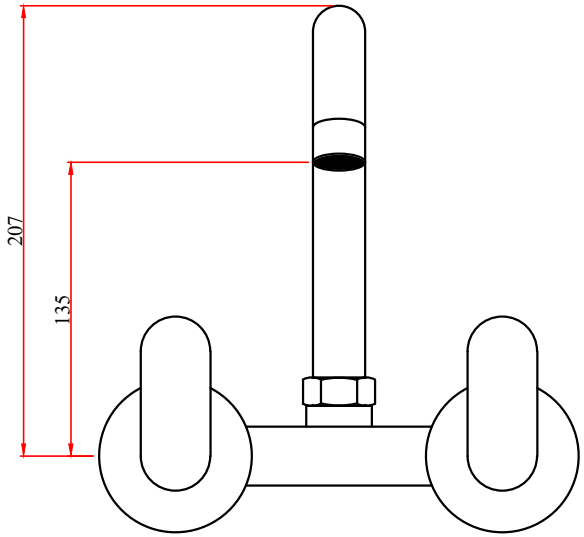


**THISTLE:- SINK MIXER WALL MOUNTED**

**CODE:- 272201140061**