SOMANY Bathware

Product Images





Description	ORISSA PAN 20"		
USP	Orissa pan, suitable for smaller washrooms.		
Colour	White		
Technical details	Internal diameter of inlet hole Ø53 ± 3mm		
	External diameter of outlet hole Ø100 ± 5mm		
	Vertical distance between the Bowl bottom edge and the centre line of the inlet hole ≤ 210mm		
	Vertical Outlet		
	Material: Ceramic - Vitreous China		
Product Dimensions	425x540x265mm		
Product net weight	13.7kg(Approx)		
Product gross weight	14.5kg(Approx)		
Certifications	ISO and CE certificate	ISO 9001:2015 ISO 14001:2015 ISO 45001:2018 EN 997	
	All technical dimensions are in accordance to British standards and Bureau of Indian Standards		

Product Technical Drawing

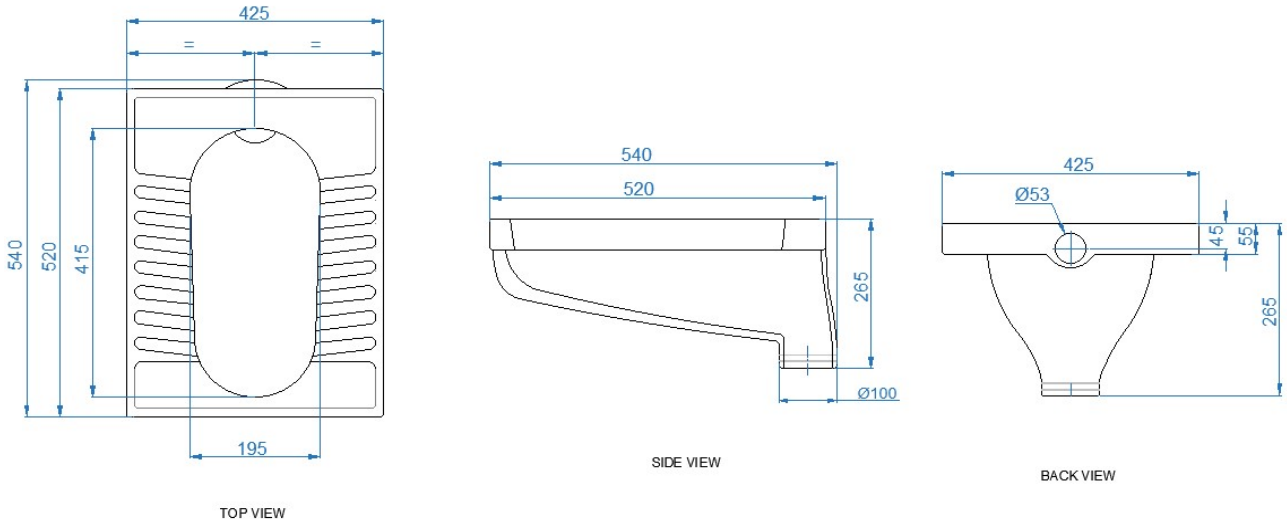

DISCLAIMER: Our every effort has been made to ensure factual accuracy, the information presented subject to changes due to requirements in different sites, markets and/ or countries. All dimensions are in mm (Tolerance ± 5 MM). Somany reserves the right to make the necessary amendments at any time without prior notice.