SOMANY Bathware

Product Images





Description	VICINITY WALL HUNG TOILET		
USP	Rectangular- shape with Biind installation provision, single hole tornado flushing, rimless design, hassle free installation, dual flush, 3/6 lpf, UF soft close with top fixing slim seat cover, aesthetic design.		
Colour	White and Desert clay		
Technical details	Internal diameter of inlet hole Ø60 ± 3 mm		
	External diameter of outlet hole Ø100 ± 5 mm		
	Regular and dual flush advantages with 3/6 lpf		
	Blind installation provision		
	Horizontal Outlet		
	Material: Ceramic - Vitreous China		
Product Dimensions	360x515x350mm		
Product net weight	26.860 kg(Approx)		
Product gross weight	31.310 kg(Approx)		
Certifications	ISO and CE certificate	ISO 9001:2015 ISO 14001:2015 ISO 45001:2018 EN 997	
	All technical dimensions are in accordance to British standards and Bureau of Indian Standards		
Accessories provided	Seat cover, Blind installation kit, inlet & outlet gasket.		

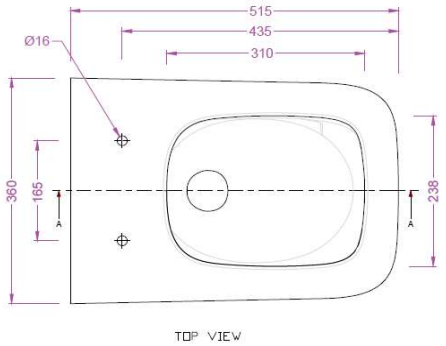

TOP VIEW

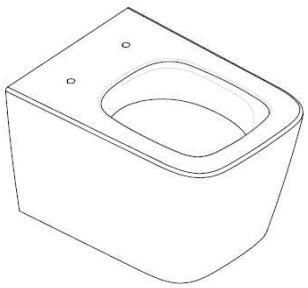

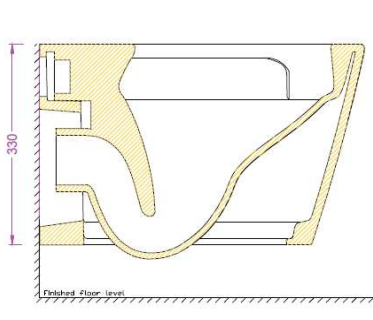

SECTION A-A

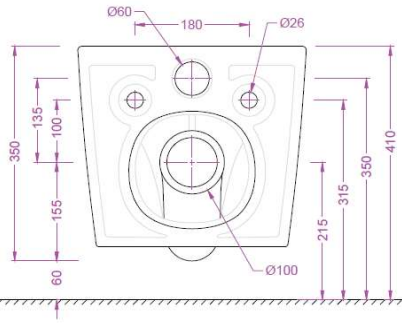

BACK VIEW

DISCLAIMER: Our every effort has been made to ensure factual accuracy, the information presented subject to changes due to requirements in different sites, markets and/ or countries. All dimensions are in mm (Tolerance ± 5 MM). Somany reserves the right to make the necessary amendments at any time without prior notice.