SOMANY Bathware

Product Images



Description	TWINKLE One Piece Toilet (S-trap)		
USP	Round-shape, compact design, box rim, dual flush 3/6 lpf, soft close with top fixing slim PP seat cover, only for kids.		
Colour	White, green		
Technical details	External diameter of outlet hole Ø80 mm		
	Horizontal distance between the wall and the centre line of the waste outlet hole ≤ 160 mm		
	Vertical Outlet		
	Material: Ceramic - Vitreous China		
Product Dimensions	290x510x530mm		
Product net weight	18.4kg(Approx)		
Product gross weight	21.8kg(Approx)		
Certifications	ISO and CE certificate	ISO 9001:2015 ISO 14001:2015 ISO 45001:2018 EN 997	
	All technical dimensions are in accordance to British standards and Bureau of Indian Standards		
Accessories provided	Seat cover, wax seal with fixing screw, flushing kit.		

Product Technical Drawing

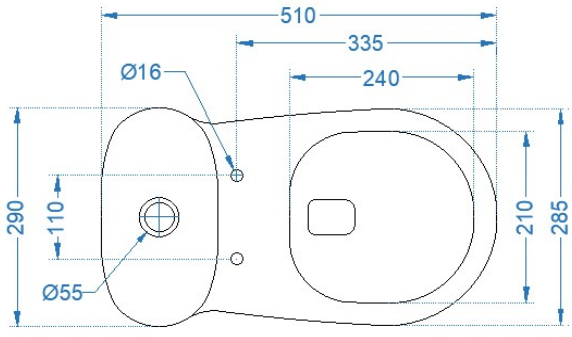

TOP VIEW

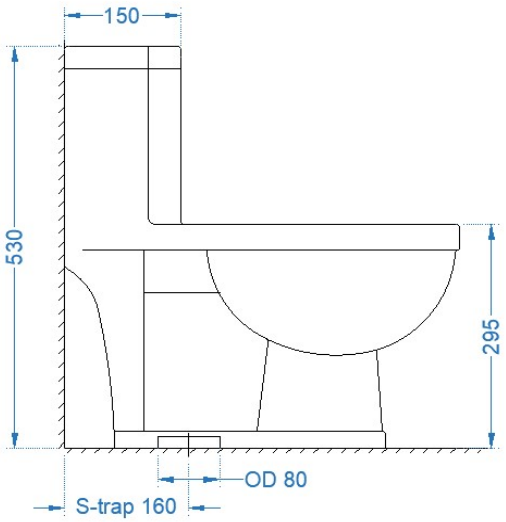

SIDE VIEW

DISCLAIMER: Our every effort has been made to ensure factual accuracy, the information presented subject to changes due to requirements in different sites, markets and/ or countries. All dimensions are in mm (Tolerance ± 5 MM). Somany reserves the right to make the necessary amendments at any time without prior notice.