SOMANY Bathware

Product Images





Description	Uniek Coupled WC (S-Trap)220mm			
USP	Complete set for coupled WC (S-trap), Efficient Flushing, Dual Flushing- 3/6 LPF.			
Colour	White			
Technical details	External diameter of outlet hole Ø100 ± 5 mm			
	Horizontal distance between the back side wall and the centre line of the waste outlet hole ≤ 220 mm			
	Vertical Outlet			
	Material: Ceramic - Vitreous China			
Product Dimensions	400x650x790mm			
Product net weight	30kg (Approx.)			
Product gross weight	32.02kg (Approx.)			
Certifications	ISO and CE certificate	ISO 9001:2015 ISO 14001:2015 ISO 45001:2018 EN 997		
	IAPMO, Flushing fitting		ASME A112.19.2-2018	Model no: Fill valve: 202438.2006, Flush valve: 196441 & 200284
	IAPMO, Water Consumption		ASME A112.19.2-2018	★★★
	IAPMO, WEP-I Star Rating (water rating)		ASME A112.19.2-2018	★★★
	All technical dimensions are in accordance to British standards and Bureau of Indian Standards			

Product Technical Drawing

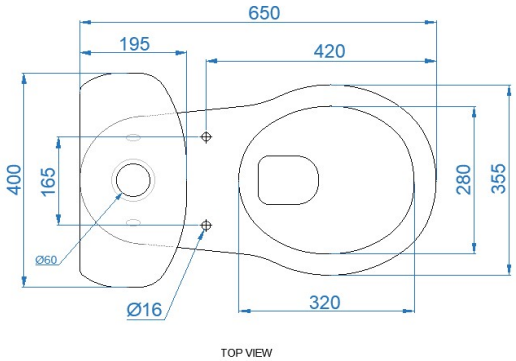

TOP VIEW

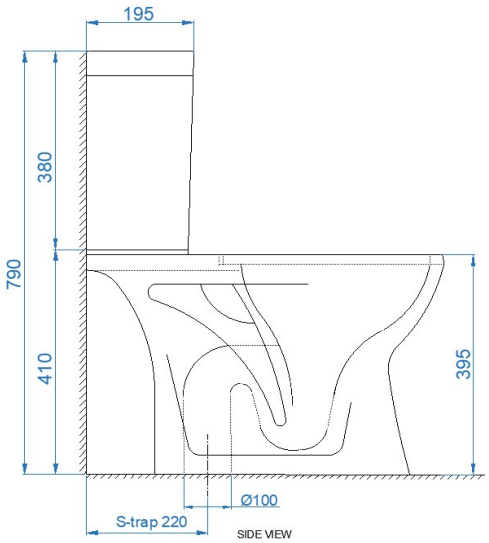

SIDE VIEW

DISCLAIMER: Our every effort has been made to ensure factual accuracy, the information presented subject to changes due to requirements in different sites, markets and/ or countries. All dimensions are in mm (Tolerance ± 5 MM). Somany reserves the right to make the necessary amendments at any time without prior notice.