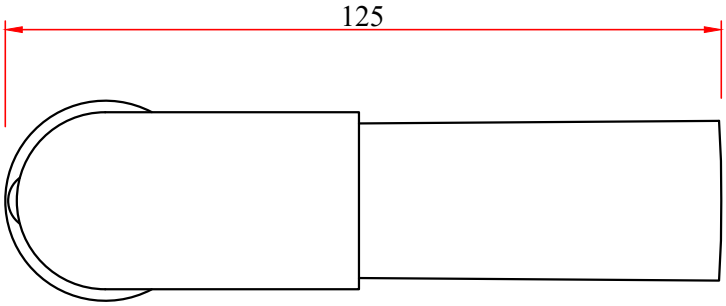

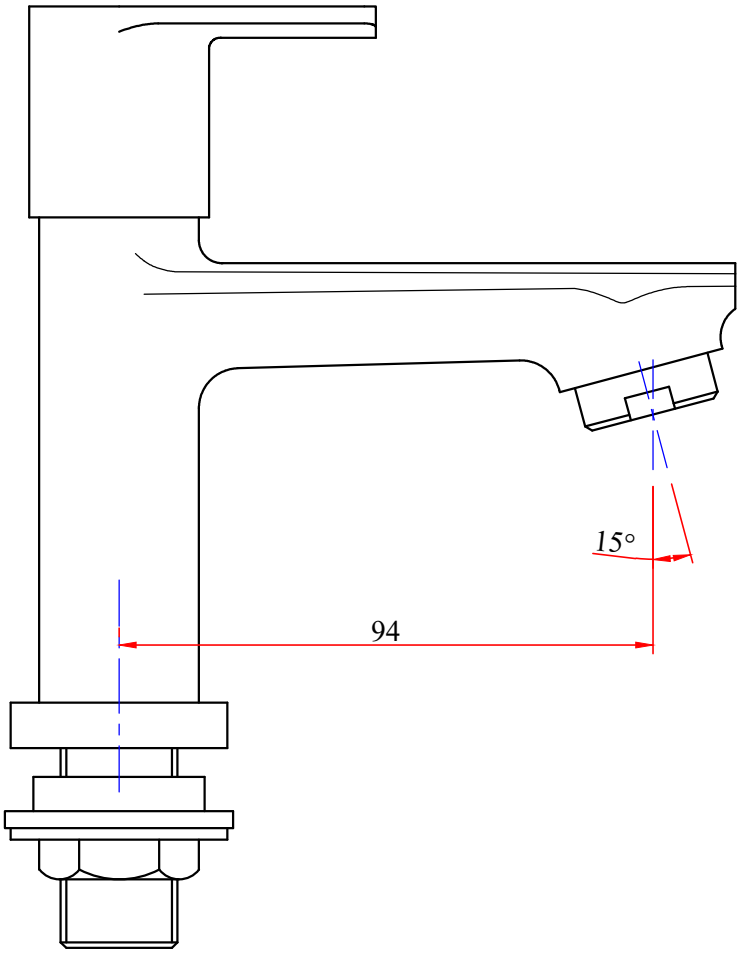

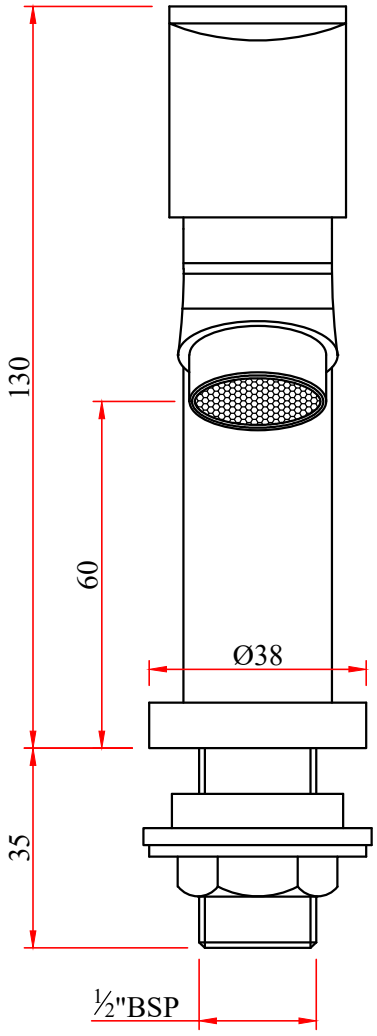

RIME:-PILLAR COCK

CODE:- 272210710011