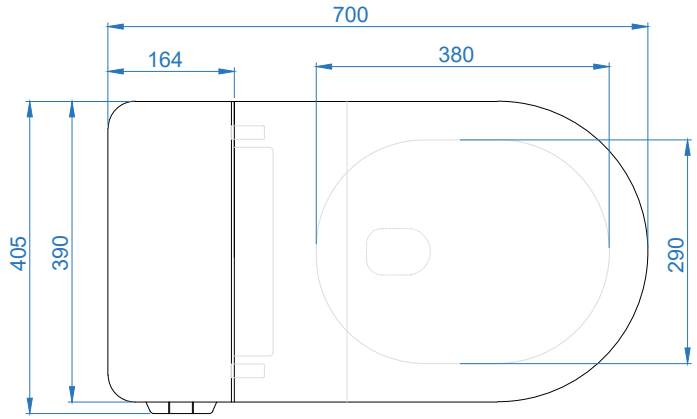

TOP VIEW

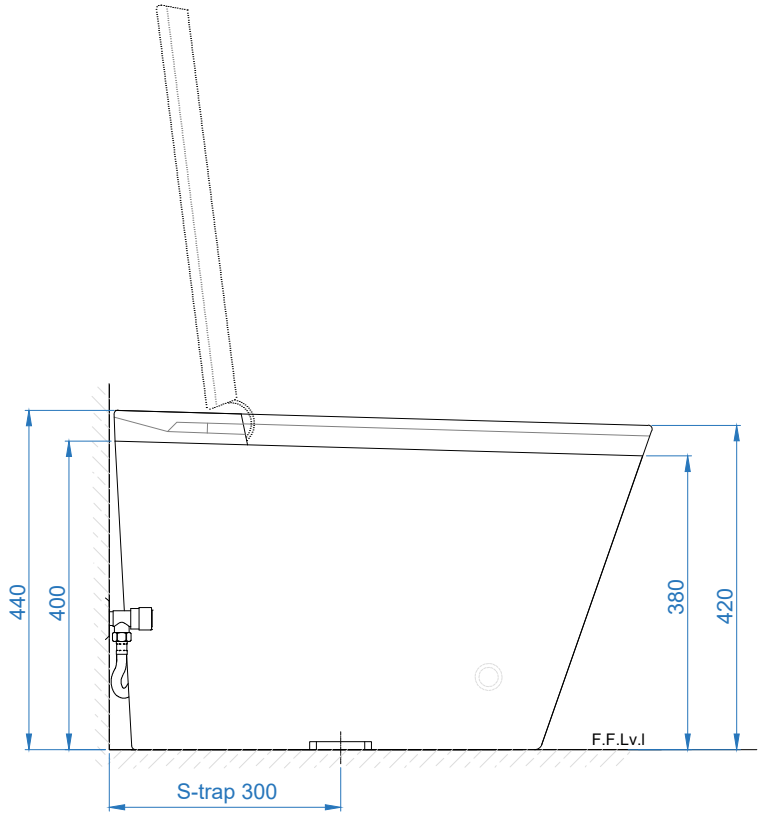

SIDE VIEW

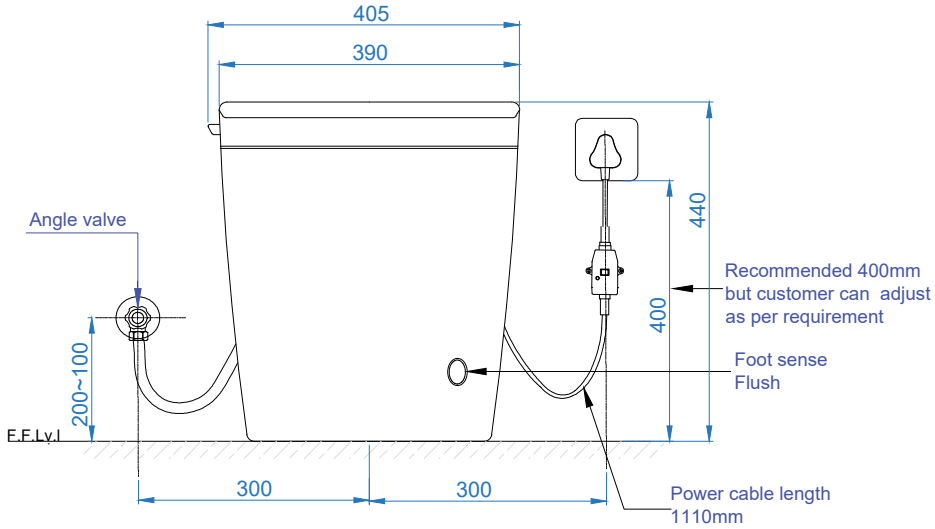

FRONT VIEW

Somany Bathware
Corporate Office : F-36, Sector-6, Noida - 201301, Uttar Pradesh
Website : www.somanyceramics.com
E-mail : marketing@somanyceramics.com
Customer Service : customer.support@somanyceramics.com
Toll free : 1800-1030-004

ITEM CODE	
ITEM TYPE	Smartsense Neu floor mounted WC
ITEM SIZE	405x700x440mm

ALL DIMENSIONS ARE IN MM.
(TOLERANCE ± 5 MM)