

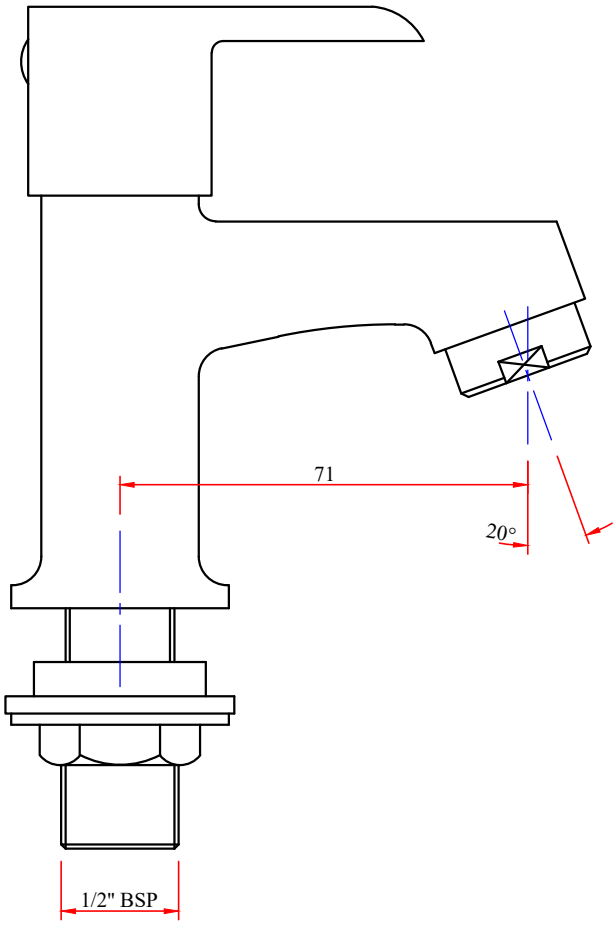

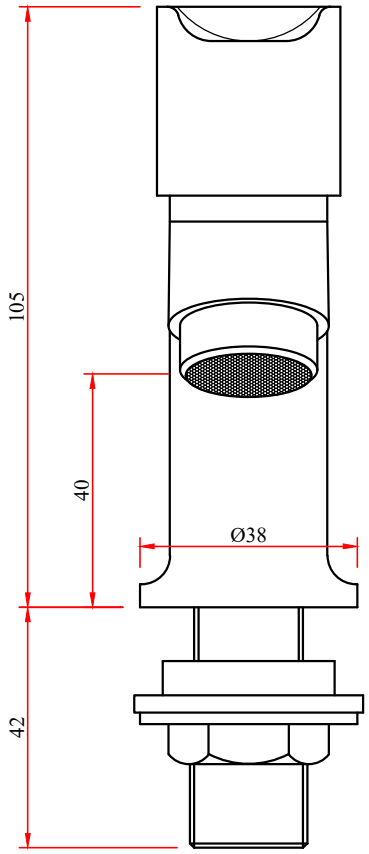

CASPER :-PILLAR COCK

CODE:- 272211410011