SOMANY Bathware

Product Image





Description	STAR EWC WITH SEAT COVER (S-TRAP)		
USP	Square Shaped Bowl Design, Efficient Flushing, Dual Flushing - 3/6 LPF, Suitable for smaller washrooms.		
Colour	White		
Technical details	Internal diameter of inlet hole Ø50 ± 3mm		
	External diameter of outlet hole Ø100 ± 5mm		
	Vertical distance between the floor and the centre line of the inlet hole ≤ 355 mm		
	Vertical Outlet		
	Material: Ceramic - Vitreous China		
Product Dimensions	335x565x395mm		
Product net weight	17.59kg(Approx)		
Product gross weight	18.630kg(Approx)		
Certifications	ISO and CE certificate	ISO 9001:2015 ISO 14001:2015 ISO 45001:2018 EN 997	
	All technical dimensions are in accordance to British standards and Bureau of Indian Standards		
Accessories provided	Seat cover		

Product Technical Drawing

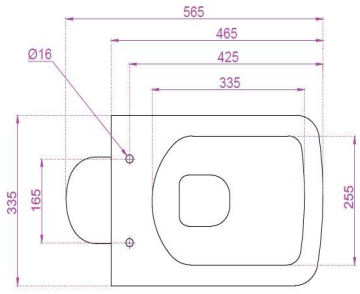

TOP VIEW

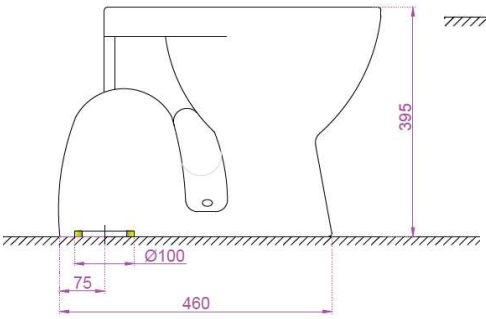

SIDE VIEW

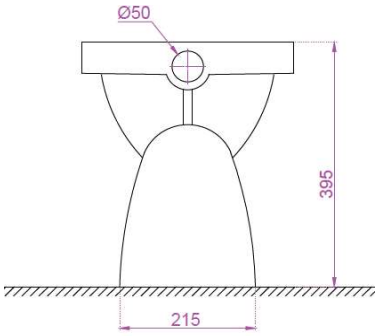

BACK VIEW

DISCLAIMER: Our every effort has been made to ensure factual accuracy, the information presented subject to changes due to requirements in different sites, markets and/ or countries. All dimensions are in mm (Tolerance ± 5 MM). Somany reserves the right to make the necessary amendments at any time without prior notice.