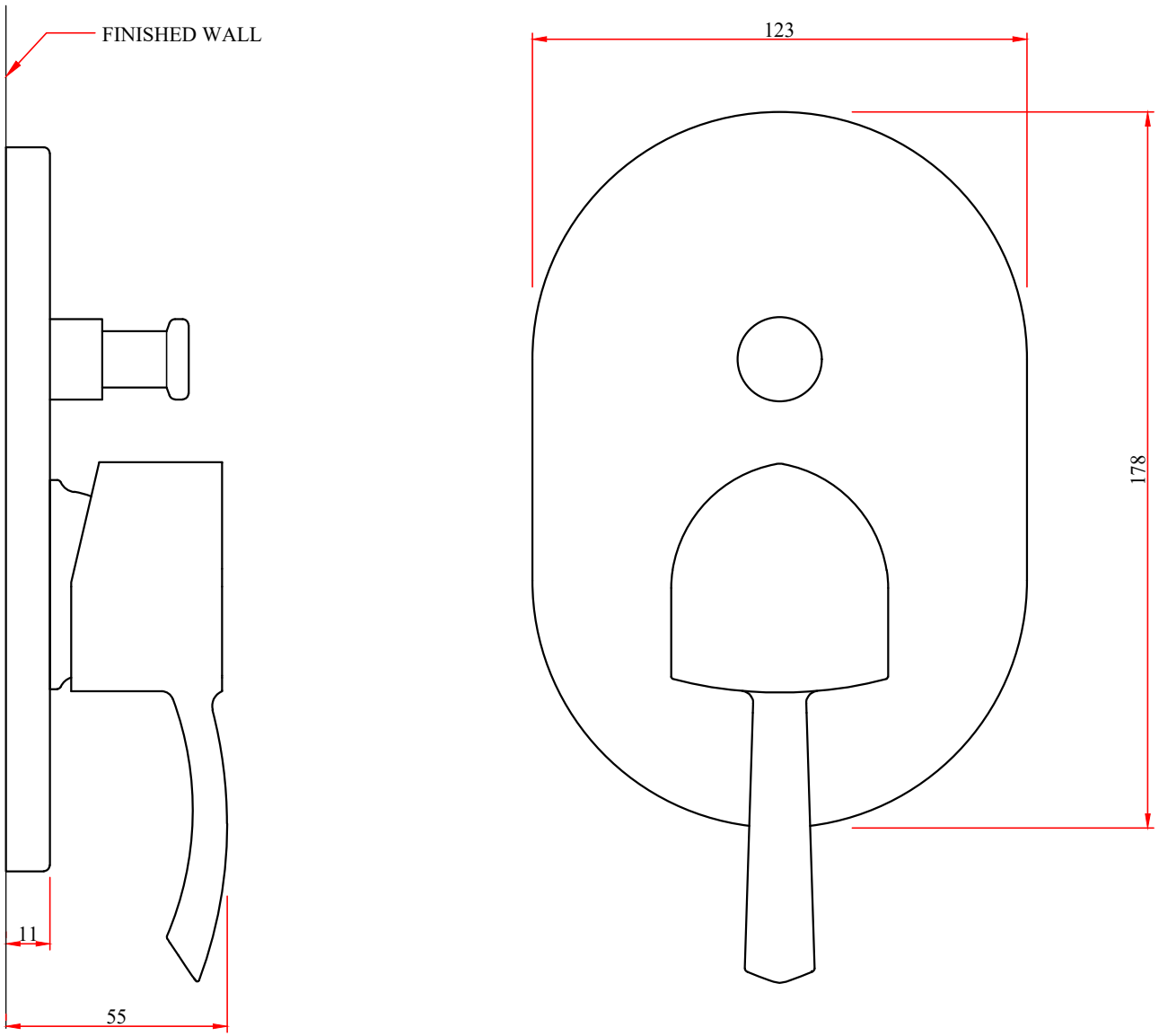

SOMANY Bathware

ARIZONA:- EXPOSED PART KIT FOR HI FLOW DIV.

CODE:- ----------