SOMANY Bathware

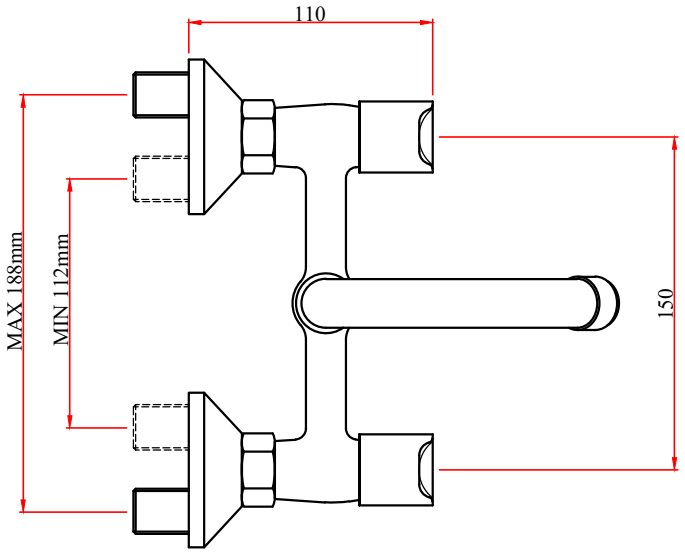


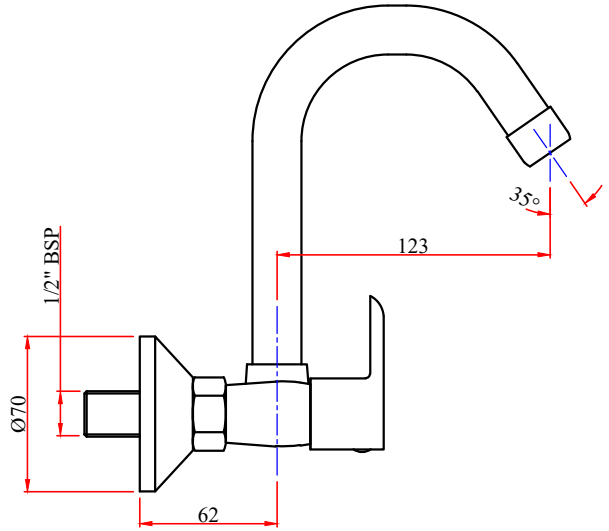


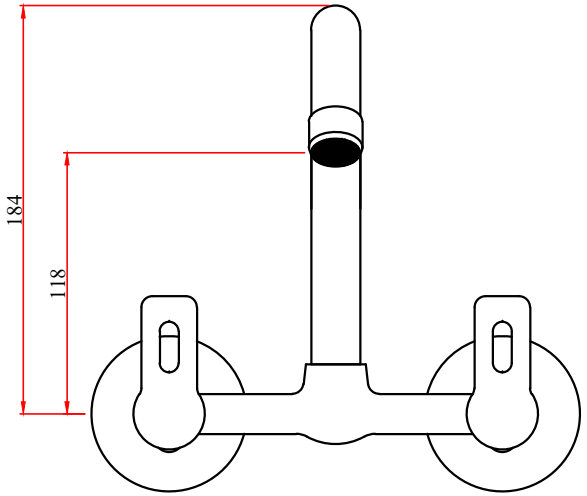


**CASPER:-SINK MIXER WALL MOUNTED**

**CODE:- 272201410041**