SOMANY Bathware



Description	THEO One Piece Toilet S-trap 300mm		
USP	Round-shape, rimless, syphonic, tornado flushing system, unique design, less noise, dual flush 3/6 lpf, soft close Top fixing slim UF seat cover, user frendly push button.		
Colour	White		
Technical details	External diameter of outlet hole Ø80 mm		
	Horizontal distance between the wall and the centre line of the waste outlet hole ≤300mm		
	Vertical Outlet		
	S-trap 300mm		
	Material: Ceramic - Vitreous China		
Product Dimensions	375x660x755mm		
Product net weight	41.1kg(Approx)		
Product gross weight	46.2kg(Approx)		
Certifications	ISO and CE certificate	ISO 9001:2015 ISO 14001:2015 ISO 45001:2018 EN 997	
	All technical dimensions are in accordance to British standards and Bureau of Indian Standards		
Accessories provided	Seat cover, wax seal with floor fixing screw, flushing kit.		

Product Technical Drawing

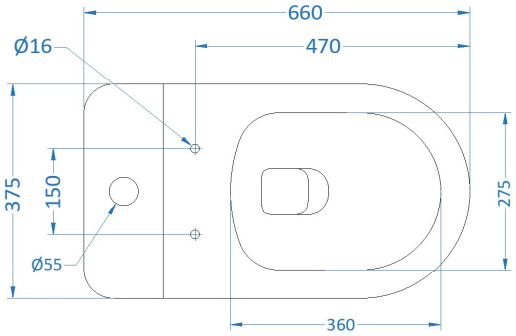

TOP VIEW

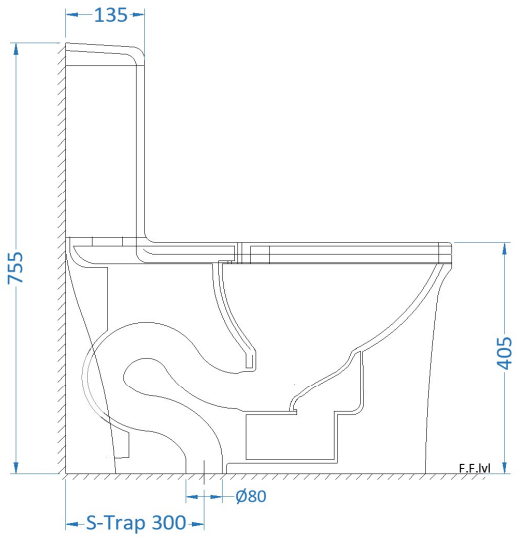

SIDE VIEW

DISCLAIMER: Our every effort has been made to ensure factual accuracy, the information presented subject to changes due to requirements in different sites, markets and/ or countries. All dimensions are in mm (Tolerance ± 5 MM). Somany reserves the right to make the necessary amendments at any time without prior notice.