SOMANY Bathware

Product Images



Description	ARENA WALL HUNG WC
USP	Rectangular shape, Rimless design, Easy installation, Suitable for smaller size washrooms, extended trap seal area, dual flush 3/6 ltr, soft close slim PP seat cover.
Colour	White
Technical details	Internal diameter of inlet hole Ø57 ± 3 mm
	External diameter of outlet hole Ø100 ± 5 mm
	Regular and dual flush advantages
	Horizontal Outlet
	Material: Ceramic - Vitreous China
Product Dimensions	360x500x340mm
Product net weight	20.81kg(Approx)
Product gross weight	24kg(Approx)
Certifications	EN:997 All technical dimensions are in accordance to British standards and Bureau of Indian Standards
Accessories provided	Seat cover, Rag bolt, inlet & outlet gasket

Product Technical Drawing

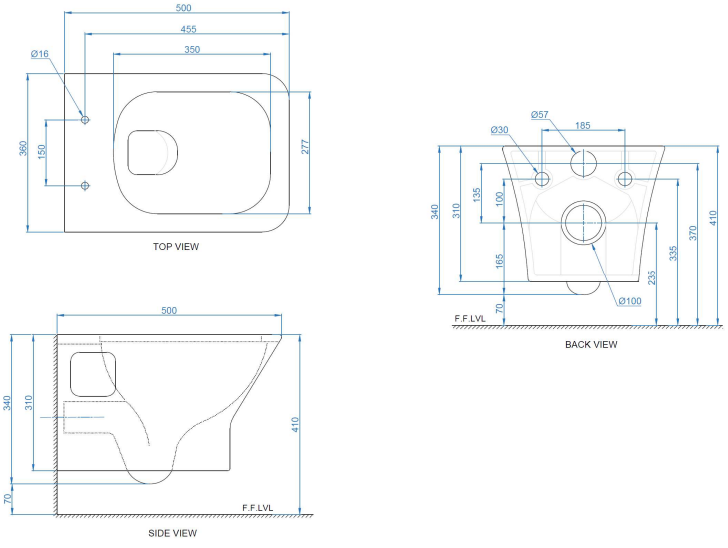

DISCLAIMER: Our every effort has been made to ensure factual accuracy, the information presented subject to changes due to requirements in different sites, markets and/ or countries. All dimensions are in mm (Tolerance ± 5 MM). Somany reserves the right to make the necessary amendments at any time without prior notice.