**ALL DIMENSION ARE IN MM**

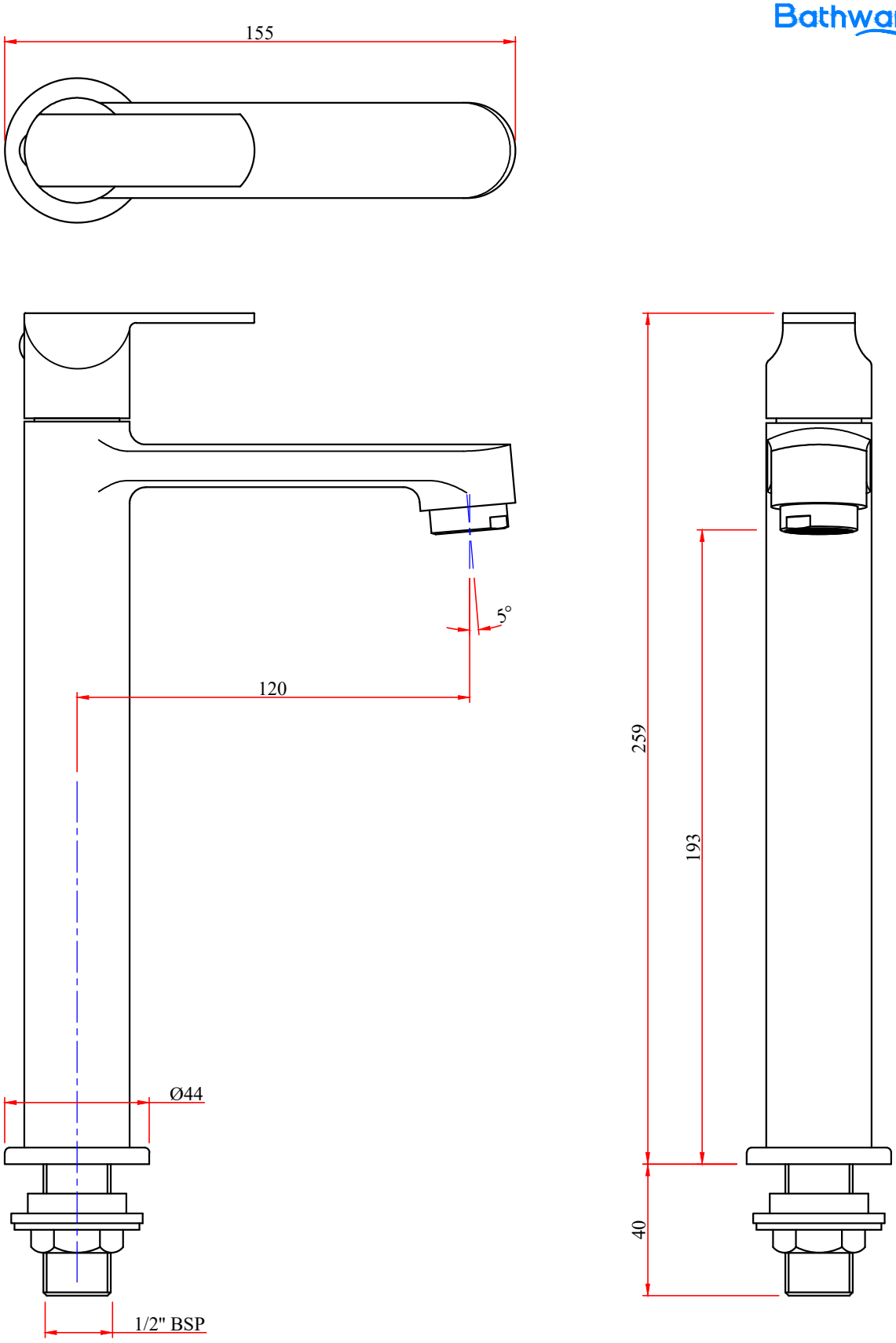


**PRIMUS :- PILLAR COCK HIGH**

**CODE:- 272211440131**