


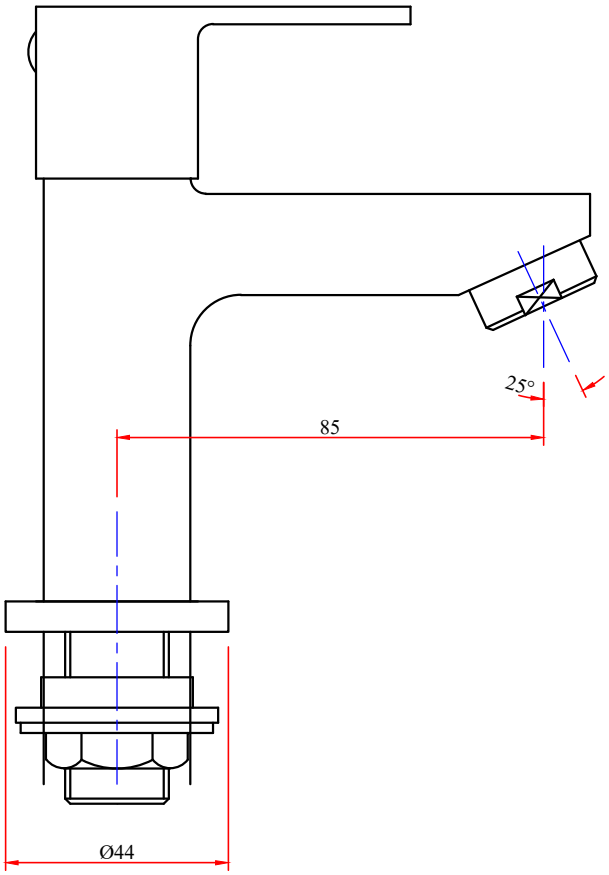


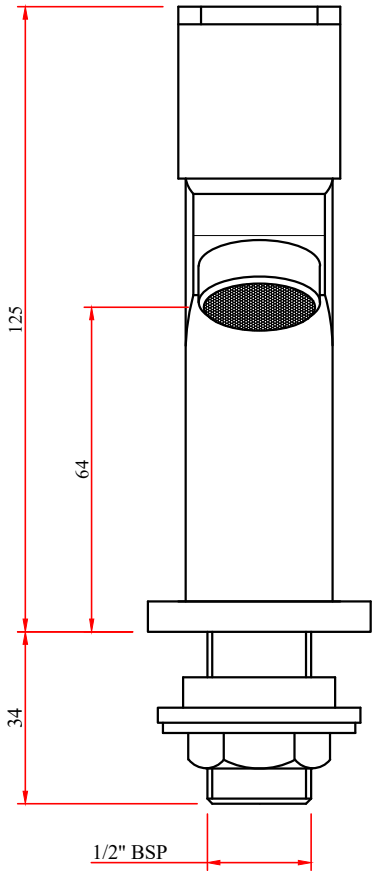


**JUPITER:- PILLAR COCK**

**CODE:- 272211420011**