ALL DIMENSION ARE IN MM

SOMANY Bathware

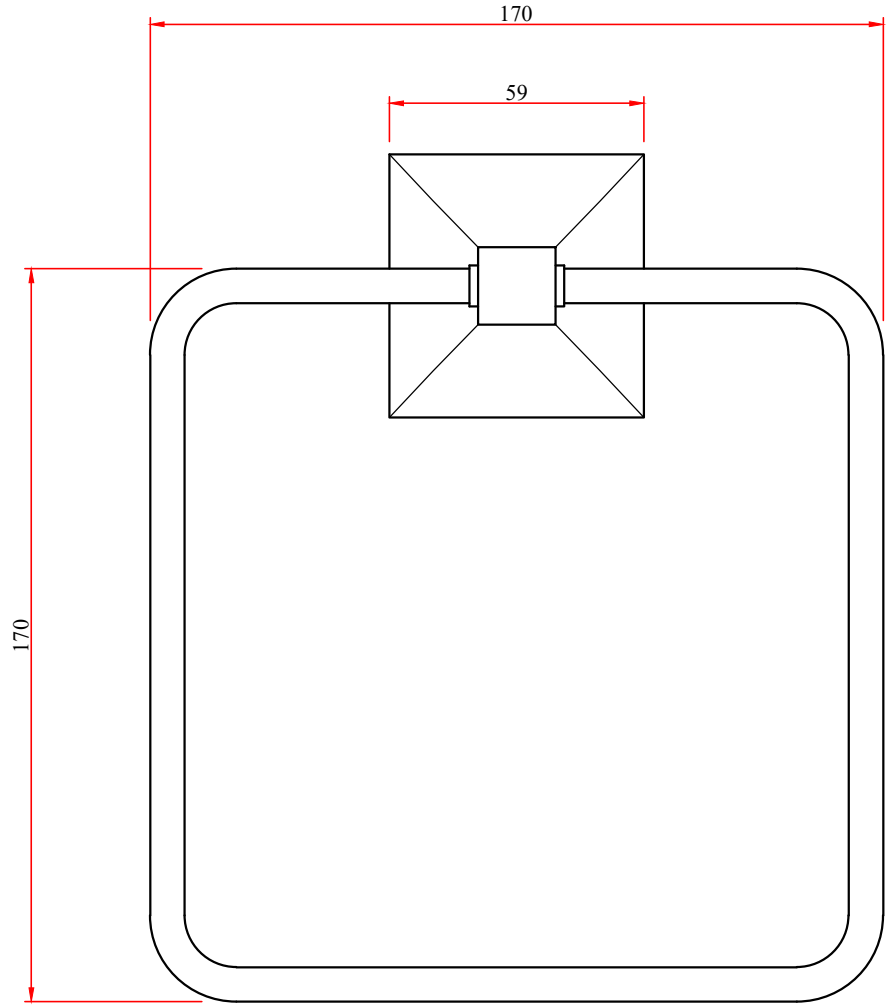

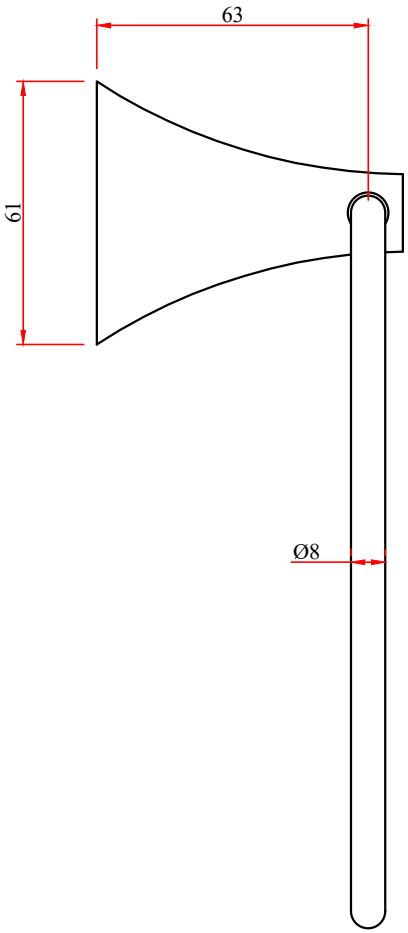

GIZA TOILET RING

CODE:- 272151340021