ALL DIMENSION ARE IN MM

SOMANY Bathware

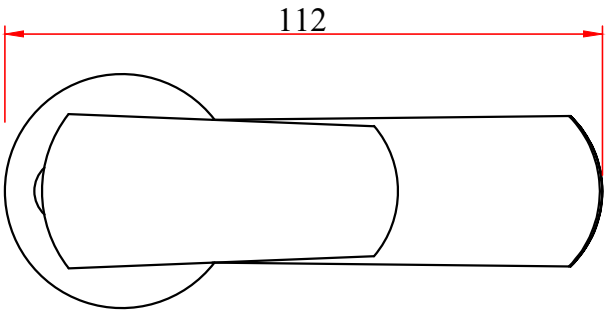

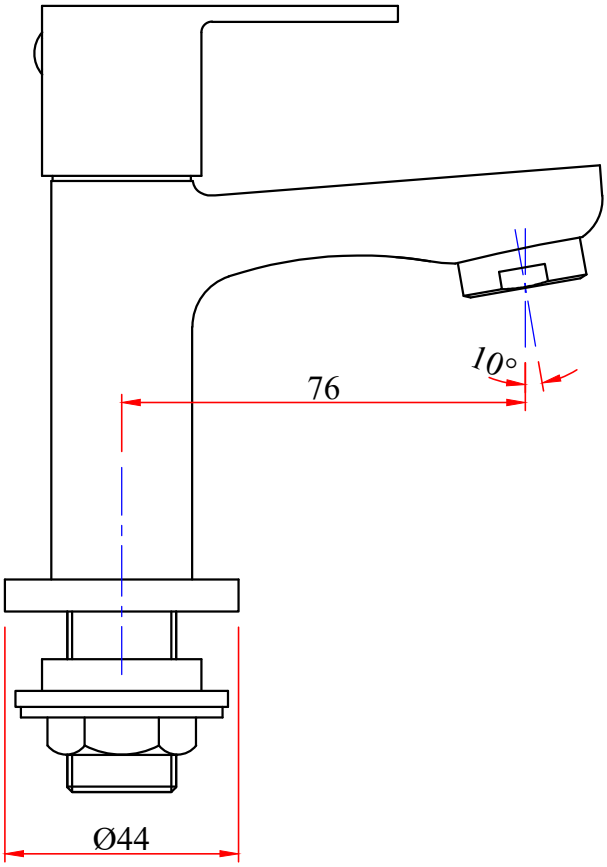

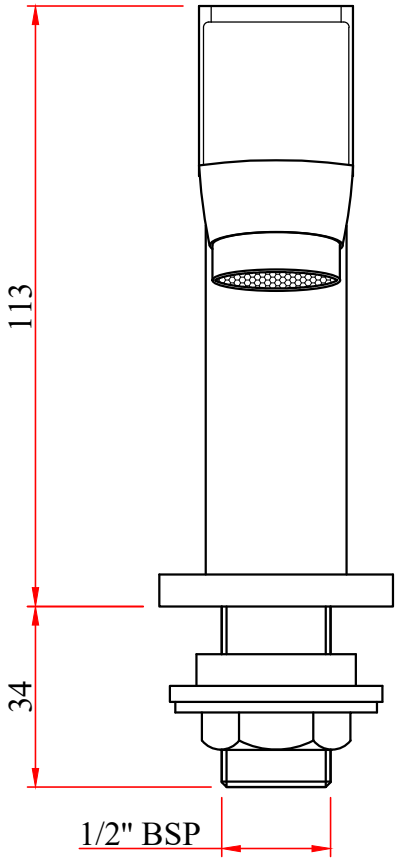

OPTIMUS:- PILLAR COCK

CODE:- 272211450031