SOMANY Bathware

Product Images





Description	Kamp One Piece toilet S-trap-220		
USP	Round shape, compact design, box rim, wash down, silent flushing, dual flush 3/6 lpf, soft close slim PP seat cover, large opening.		
Colour	White		
Technical details	External diameter of outlet hole Ø100 mm		
	Horizontal distance between the wall and the centre line of the waste outlet hole ≤220mm		
	Horizontal outlet		
	Material: Ceramic - Vitreous China		
Product Dimensions	345x635x680mm		
Product net weight	40.63 kg(Approx)		
Product gross weight	43.1 kg(Approx)		
Certifications	ISO and CE certificate	ISO 9001:2015 ISO 14001:2015 ISO 45001:2018 EN 997	
	All technical dimensions are in accordance to British standards and Bureau of Indian Standards		
Accessories provided	Seat cover, wax seal with floor fixing screw, flushing kit.		

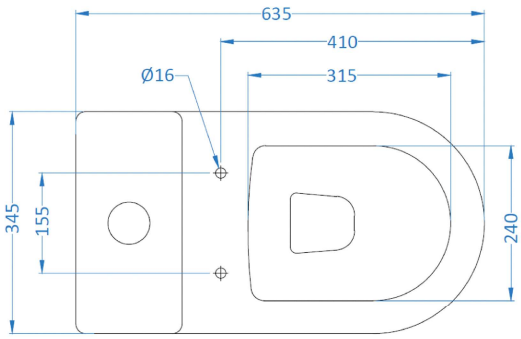

TOP VIEW

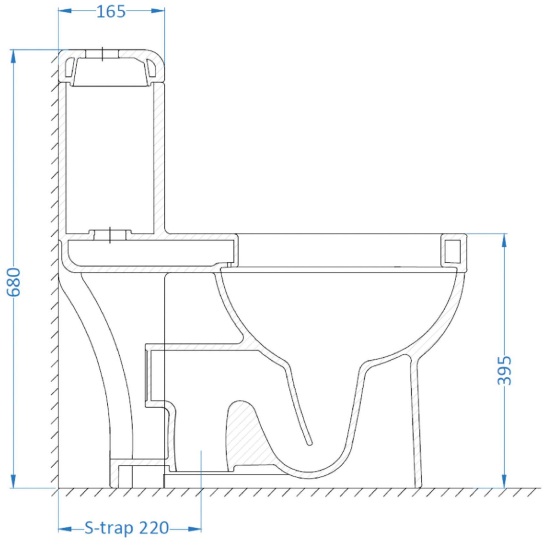

CROSS SECTION VIEW

DISCLAIMER: Our every effort has been made to ensure factual accuracy, the information presented subject to changes due to requirements in different sites, markets and/ or countries. All dimensions are in mm (Tolerance ± 5 MM). Somany reserves the right to make the necessary amendments at any time without prior notice.