Product Images			
Description	NEXO WALL HUNG WC		
USP	Rectangular shape with Blind installation provision, rimless design, hassle free installation, dual flush, 3/6 lpf, UF soft close with top fixing slim seat cover.		
Colour	White		
Technical details	Internal diameter of inlet hole Ø55 ± 3 mm		
	External diameter of outlet hole Ø100 ± 5 mm		
	Regular and dual flush advantages		
	Blind kit installation provision		
	Horizontal Outlet		
	Material: Ceramic - Vitreous China		
Product Dimensions	345x515x355mm		
Product net weight	28.5kg(Approx)		
Product gross weight	30.0kg(Approx)		
Certifications	ISO and CE certificate	ISO 9001:2015 ISO 14001:2015 ISO 45001:2018 EN 997	
	All technical dimensions are in accordance to British standards and Bureau of Indian Standards		
Accessories provided	Seat cover, BI kit, inlet & outlet gasket.		

Product Technical Drawing

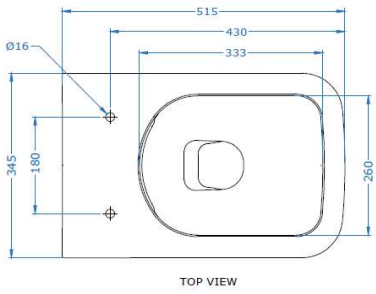

TOP VIEW

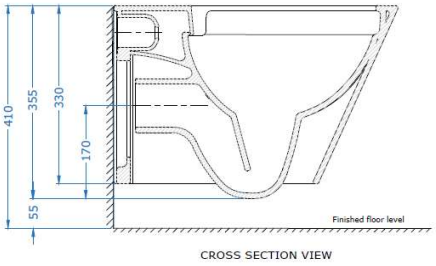

CROSS SECTION VIEW

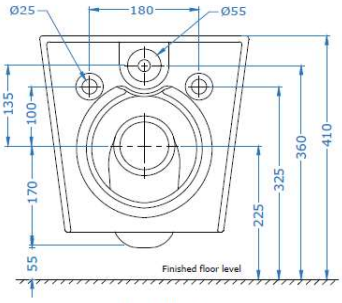

BACK VIEW

DISCLAIMER: Our every effort has been made to ensure factual accuracy, the information presented subject to changes due to requirements in different sites, markets and/ or countries. All dimensions are in mm (Tolerance ± 5 MM). Somany reserves the right to make the necessary amendments at any time without prior notice.