SOMANY Bathware

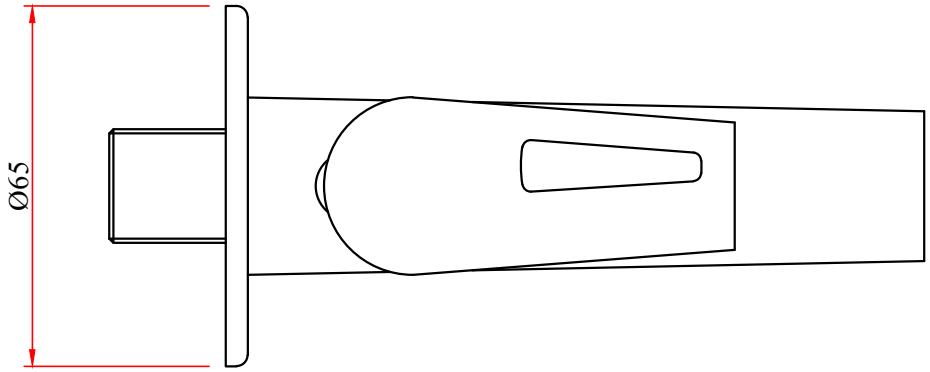

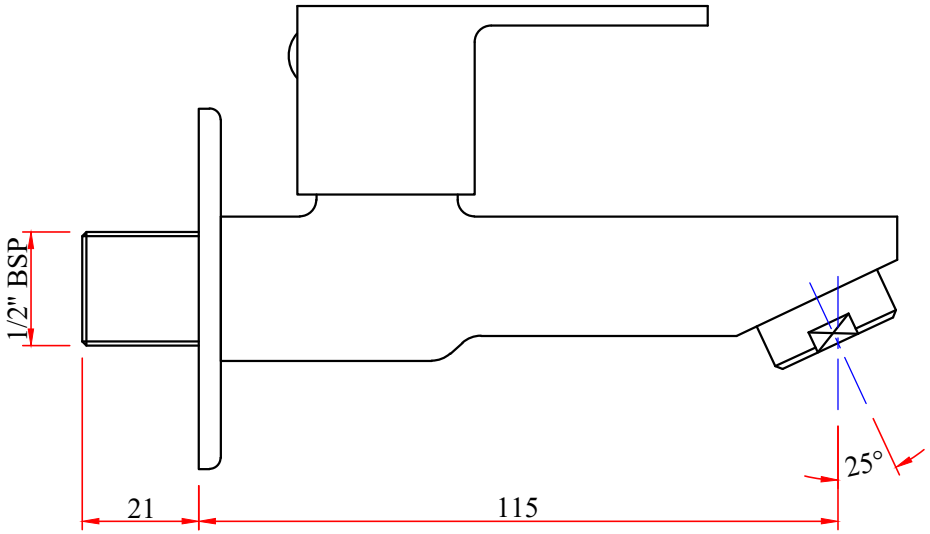

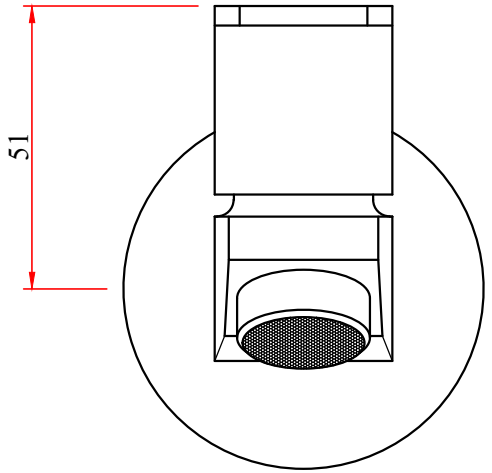

JUPITER:-LONG NOSE BIB COCK

CODE:- 272211420041