SOMANY Bathware

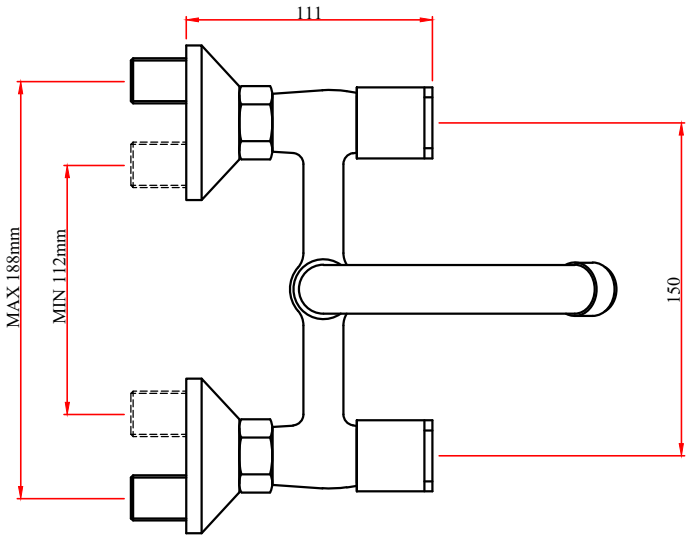

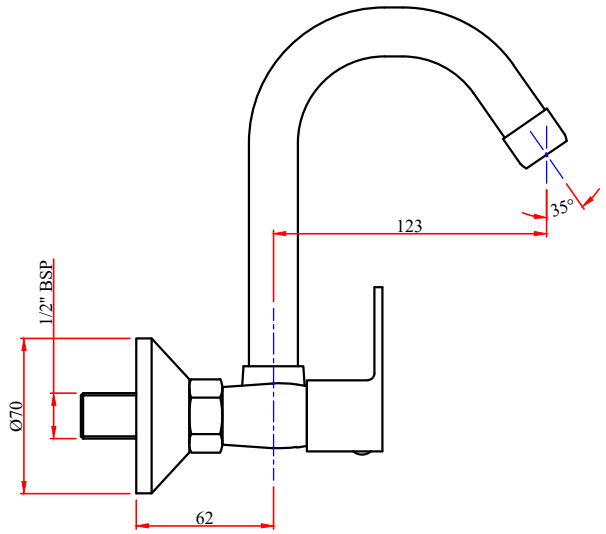

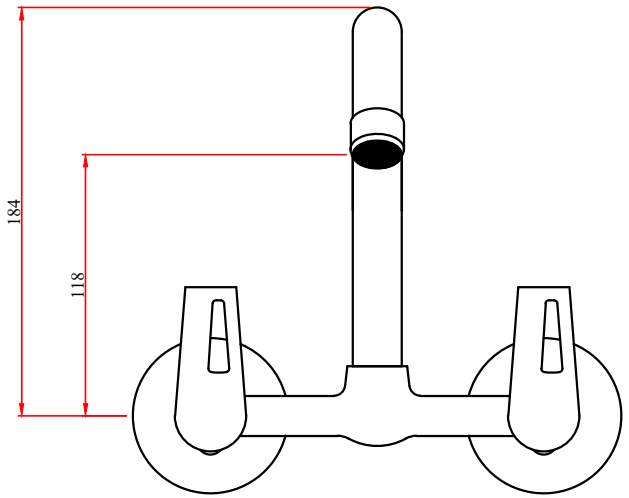

JUPITER:-SINK MIXER WALL MOUNTED

CODE:- 272201420041