SOMANY Bathware

Product Image





| | | | |
|---|---|---|---|
| Description | Codie one Piece half pedestal basin | | |
| USP | Square-shape one piece half pedestal basin with tap hole and over flow hole, elongated installation holes , compact size, suitable for smaller bathrooms. | | |
| Colour | White | | |
| Technical details | Diameter of tap hole Ø35 ±2 | | |
| | ID of waste outlet hole Ø45 ±3 | | |
| | Horizontal distance between the centre line of tap hole and centre line of the waste outlet hole ≤125mm | | |
| | Vertical Outlet | | |
| | Material: Ceramic - Vitreous China | | |
| Product Dimensions | 460x355x310mm | | |
| Product net weight | 18.7kg(Approx) | | |
| Product gross weight | 19.6kg(Approx) | | |
| Certifications | ISO and CE certificate | ISO 9001:2015<br>ISO 14001:2015<br>ISO 45001:2018<br>EN 14688 | |
| | All technical dimensions are in accordance to British standards and Bureau of Indian Standards | | |

Product Technical Drawing

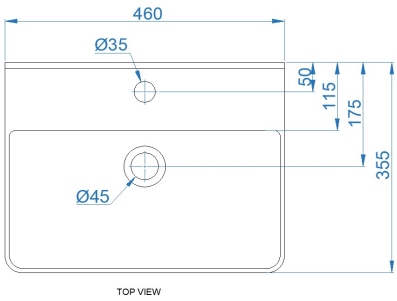

TOP VIEW

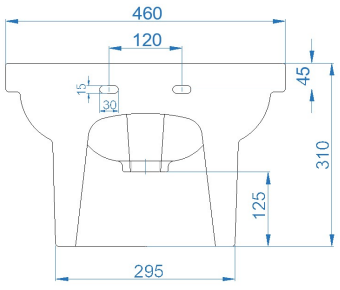

BACK VIEW

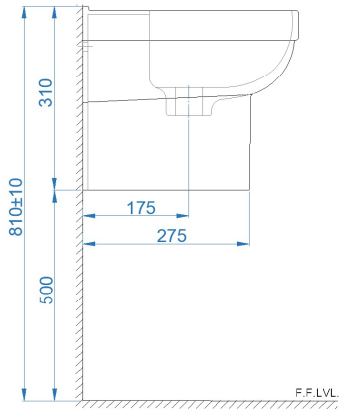

SIDE VIEW

DISCLAIMER: Our every effort has been made to ensure factual accuracy, the information presented subject to changes due to requirements in different sites, markets and/ or countries. All dimensions are in mm (Tolerance ± 5 MM). Somany reserves the right to make the necessary amendments at any time without prior notice.