SOMANY Bathware





Description	ORBITO ONE PIECE TOILET S-Trap 220mm		
USP	Round-shape, Single hole-Rimless design, Syphonic, dual flush 3/6 lpf, soft close slim PP seat cover, user frendly push button.		
Colour	White		
Techanical details	Horizontal distance between the wall and the centre line of the waste outlet hole ≤220mm		
	Single hole flushing, Rimless design , Syphonic		
	Vertical Outlet		
	S-trap 220mm		
	Material: Ceramic - Vitreous China		
Product Dimensions	370x665x745mm		
Product net weight	47.32kg(Approx)		
Product gross weight	51.6kg(Approx)		
Certifications	ISO and CE certificate	ISO 9001:2015 ISO 14001:2015 ISO 45001:2018 EN 997	
	All technical dimensions are in accordance to British standards and Bureau of Indian Standards		
Accessories provided	Seat cover, wax seal with fixing screw, flushing kit.		

Product Technical Drawing

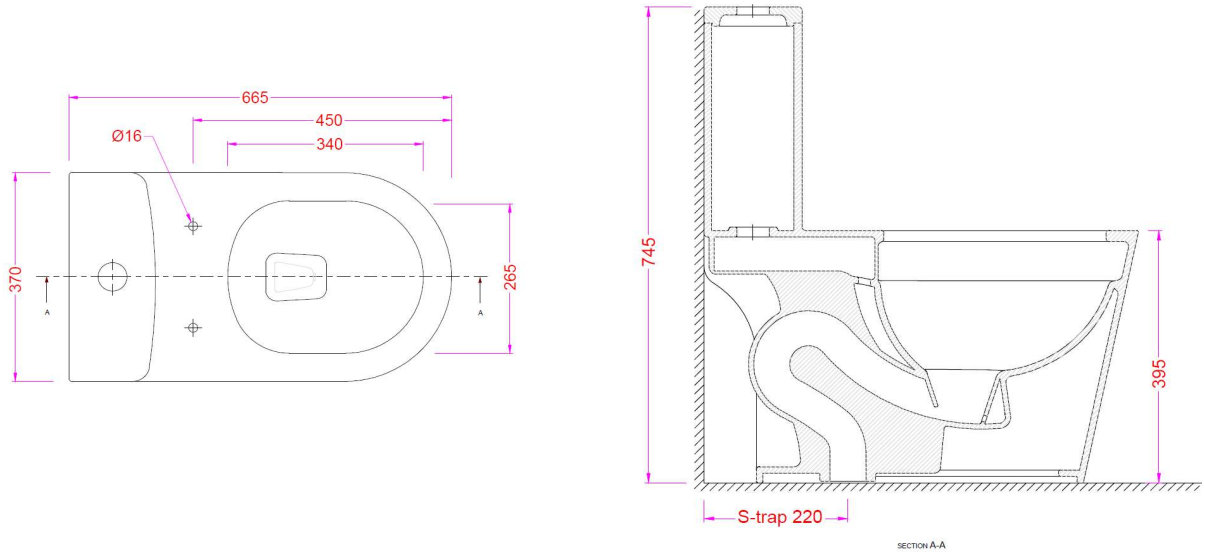

DISCLAIMER: Our every effort has been made to ensure factual accuracy, the information presented subject to changes due to requirements in different sites, markets and/ or countries. All dimensions are in mm (Tolerance ± 5 MM). Somany reserves the right to make the necessary amendments at any time without prior notice.