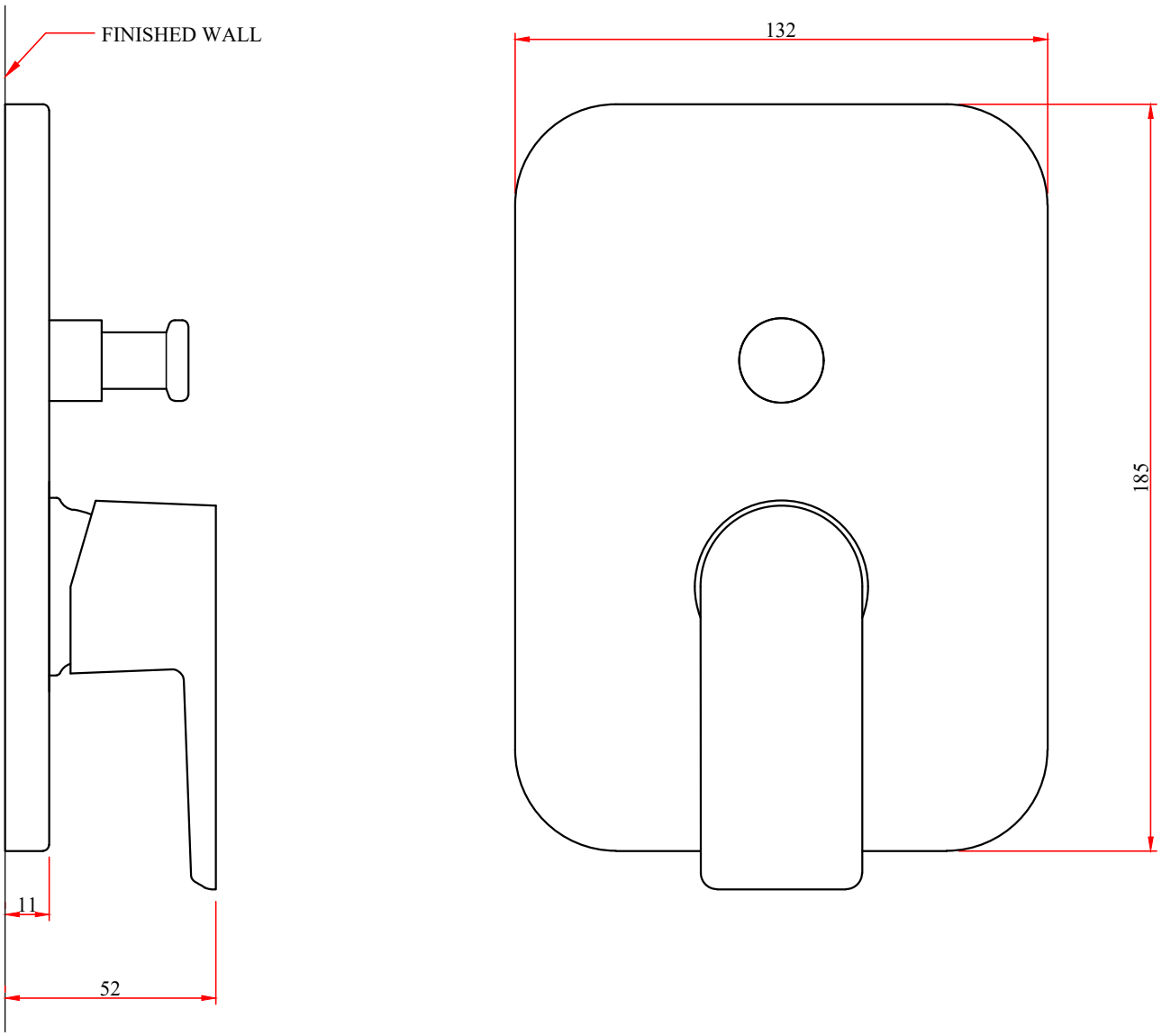

SOMANY Bathware

ELYSEES:- EXPOSED PART KIT FOR HI FLOW DIV.

CODE:- ----------