SOMANY Bathware



Description	MARINA ONE PIECE S-TRAP-300mm			
USP	Square-shape, box rim, wash down, less noise, dual flush 3/6 lpf, soft close Top fixing slim PP seat cover			
Colour	White			
Technical details	External diameter of outlet hole Ø100 mm			
	Horizontal distance between the wall and the centre line of the waste outlet hole ≤300mm			
	Vertical Outlet			
	S-trap 300mm			
	Material: Ceramic - Vitreous China			
Product Dimensions	360x700x715mm			
Product net weight	44kg(Approx)			
Product gross weight	47.9kg(Approx)			
Certifications	ISO and CE certificate	ISO 9001:2015 ISO 14001:2015 ISO 45001:2018 EN 997		
	IAPMO, Flushing fitting		ASME A112.19.2-2018	Model no: Fill valve: A001, Flush valve: B001
	IAPMO, Water Consumption		ASME A112.19.2-2018	★★★
	IAPMO, WEP-I Star Rating (water rating)		ASME A112.19.2-2018	★★★
	All technical dimensions are in accordance to British standards and Bureau of Indian Standards			
Accessories provided	Seat cover, wax seal with fixing screw, flushing kit.			

Product Technical Drawing

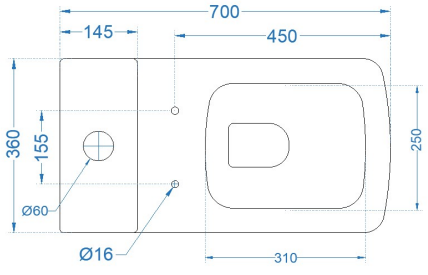

TOP VIEW

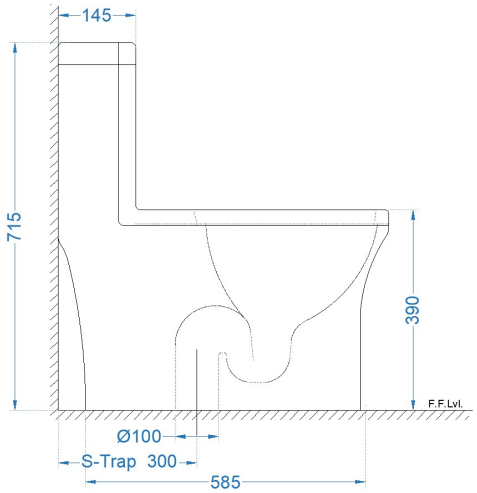

SIDE VIEW

DISCLAIMER: Our every effort has been made to ensure factual accuracy, the information presented subject to changes due to requirements in different sites, markets and/ or countries. All dimensions are in mm (Tolerance ± 5 MM). Somany reserves the right to make the necessary amendments at any time without prior notice.