SOMANY Bathware

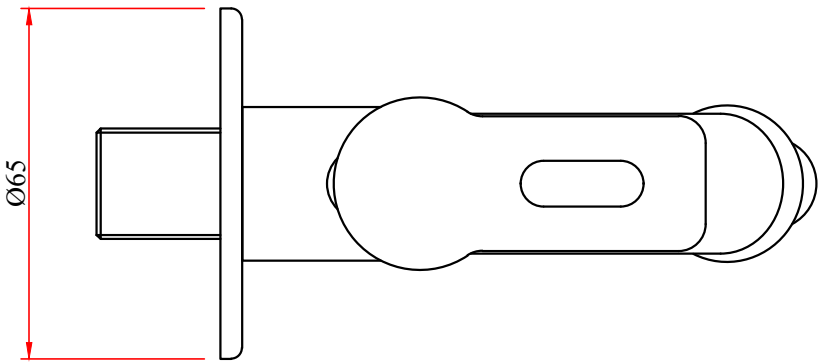

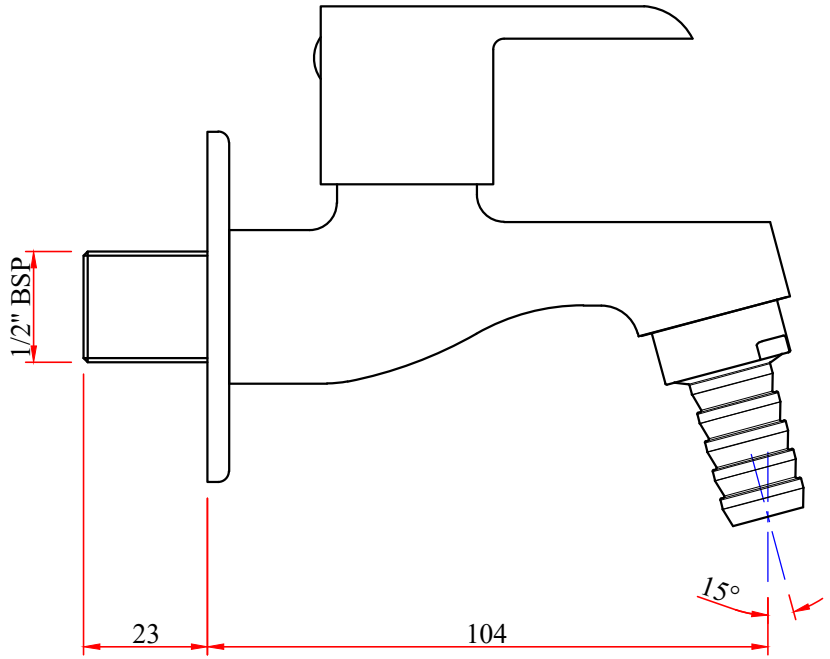

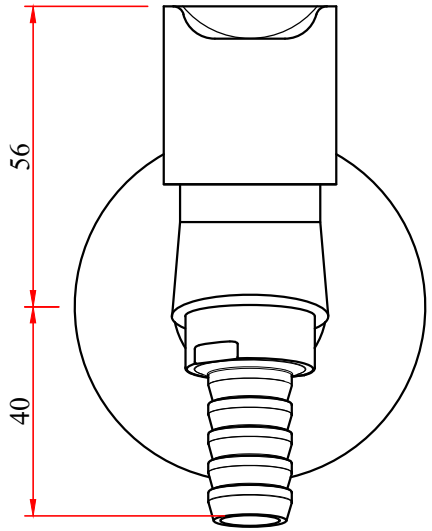

CASPER:-BIB COCK WITH NOZZLE

CODE:- 272211410131