SOMANY Bathware

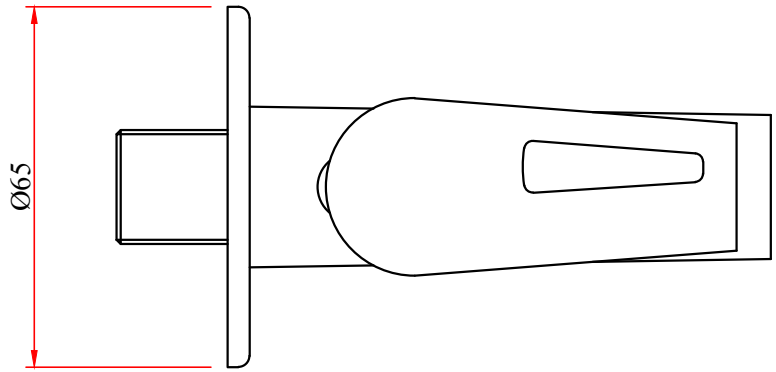


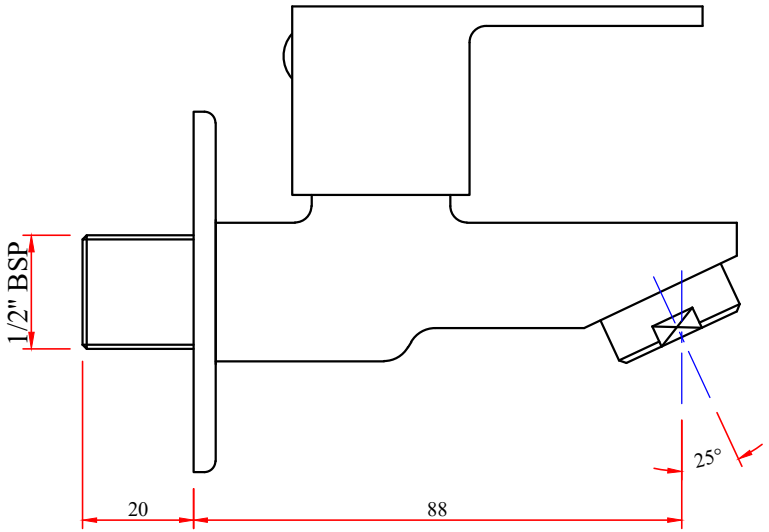


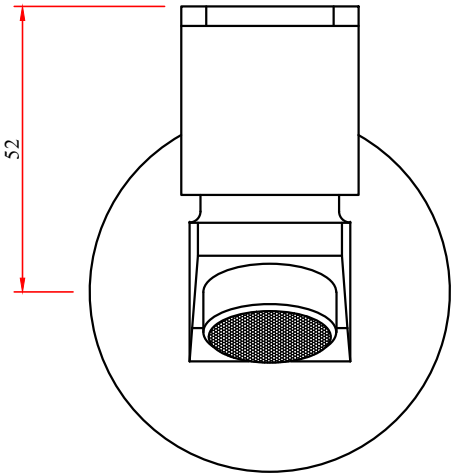


**JUPITER:-BIB COCK**

**CODE:- 272211420051**